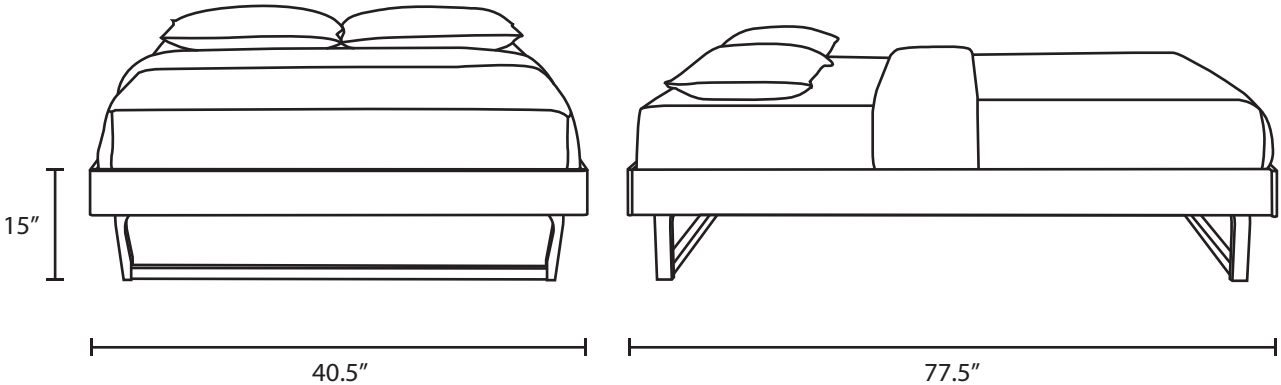
15″
40.5″
77.5″