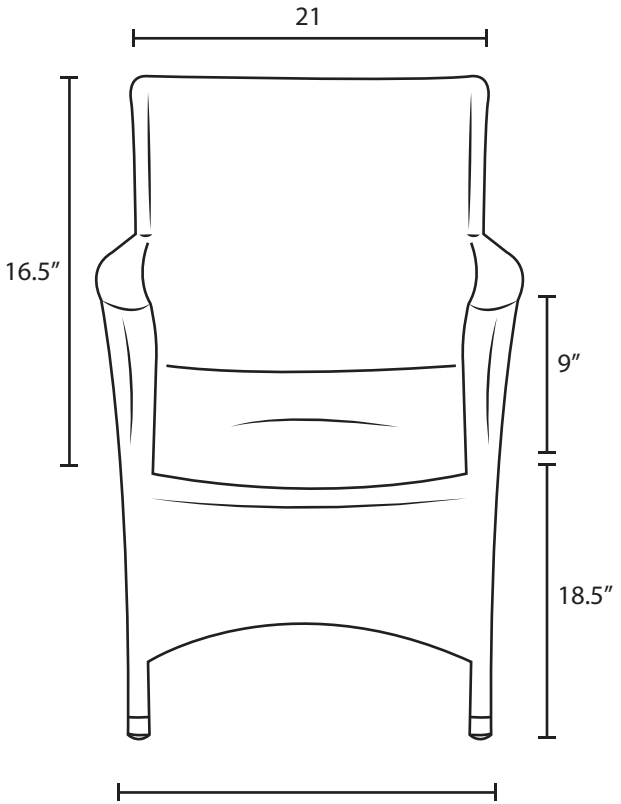

Overall Dimensions: 22.5″
Seat Dimensions: 18.5″

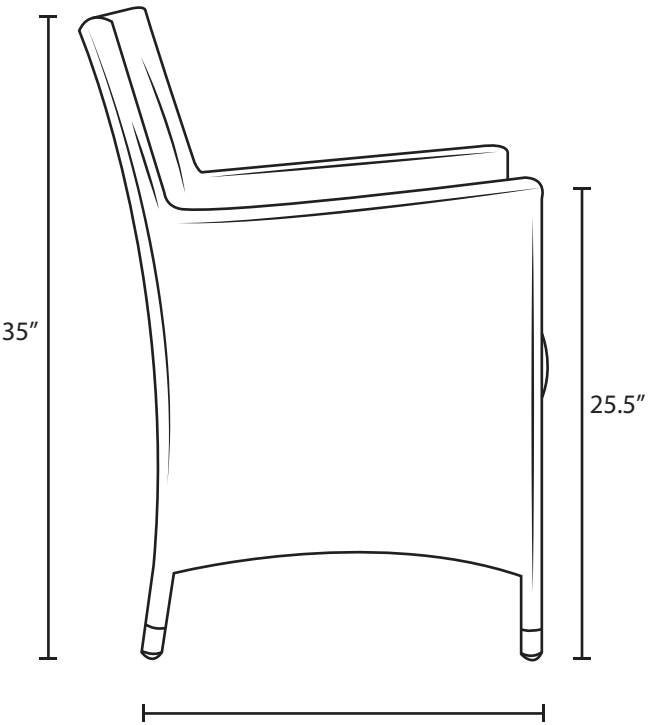

Overall Dimensions: 23.5″
Seat Dimensions: 20″