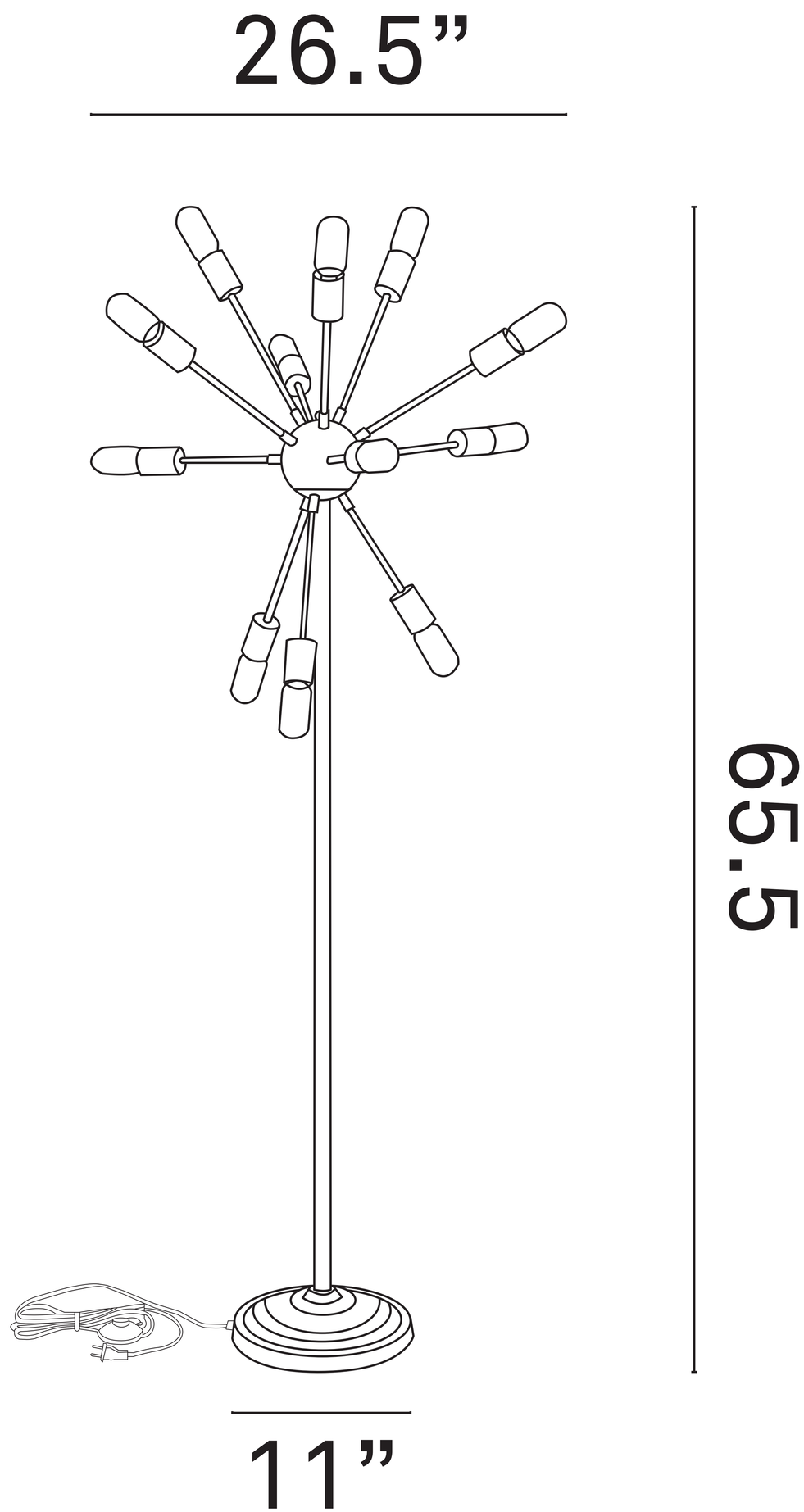
26.5”
65.5
11”