ASSEMBLY INSTRUCTION

EEI-1919 EEI-1930 EEI-1941 EEI-1920 EEI-1931 EEI-1942
EEI-1922 EEI-1933 EEI-1944 EEI-1923 EEI-1934 EEI-1945
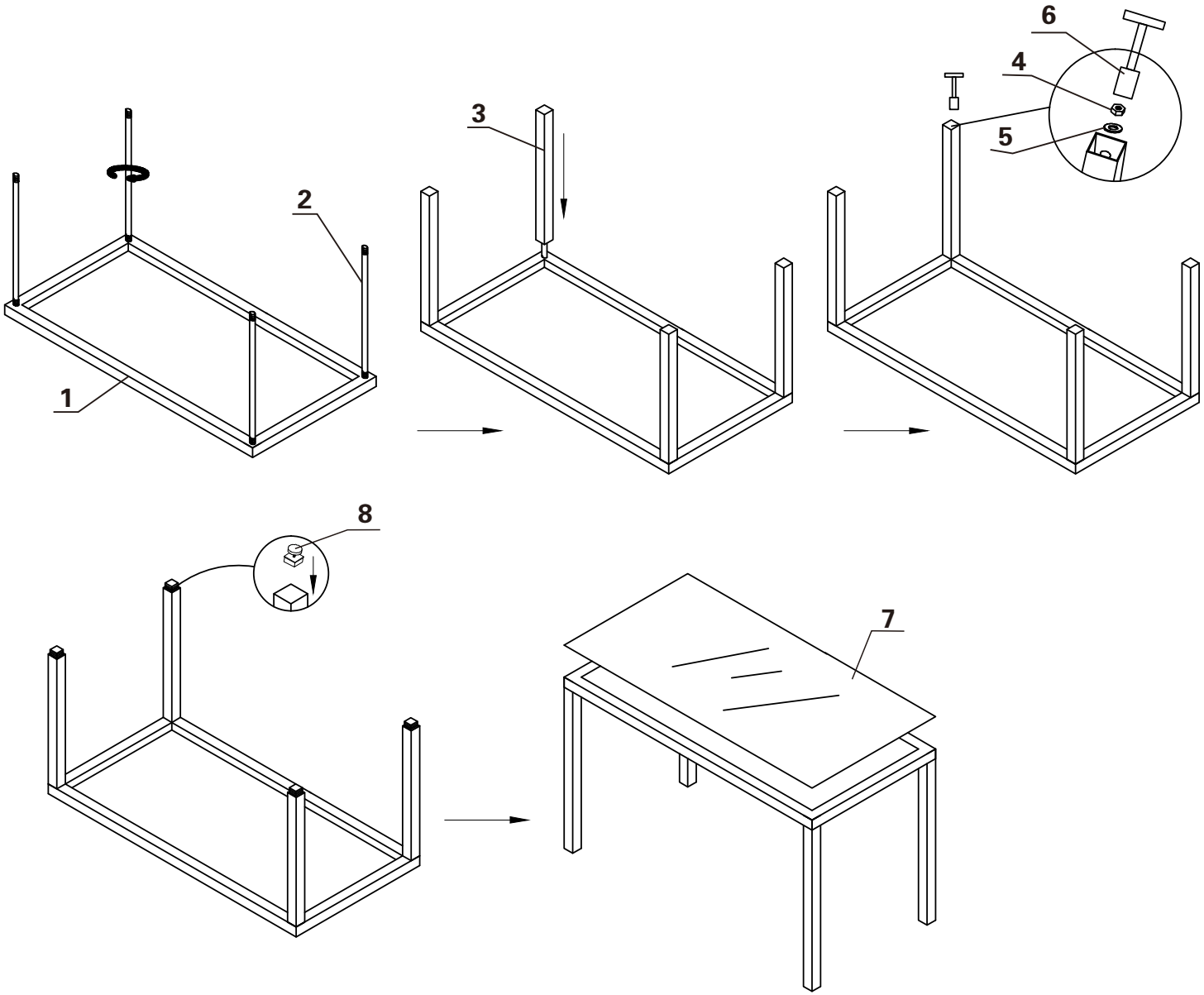
1		1PC
2		4PCS
3		4PCS
4		4PCS
5		4PCS
6		1PC
7		1PC
8		4PCS