Model:EEI-1568

Crystand Method

NO	Crystal Model	Number

Installing Sketch Map

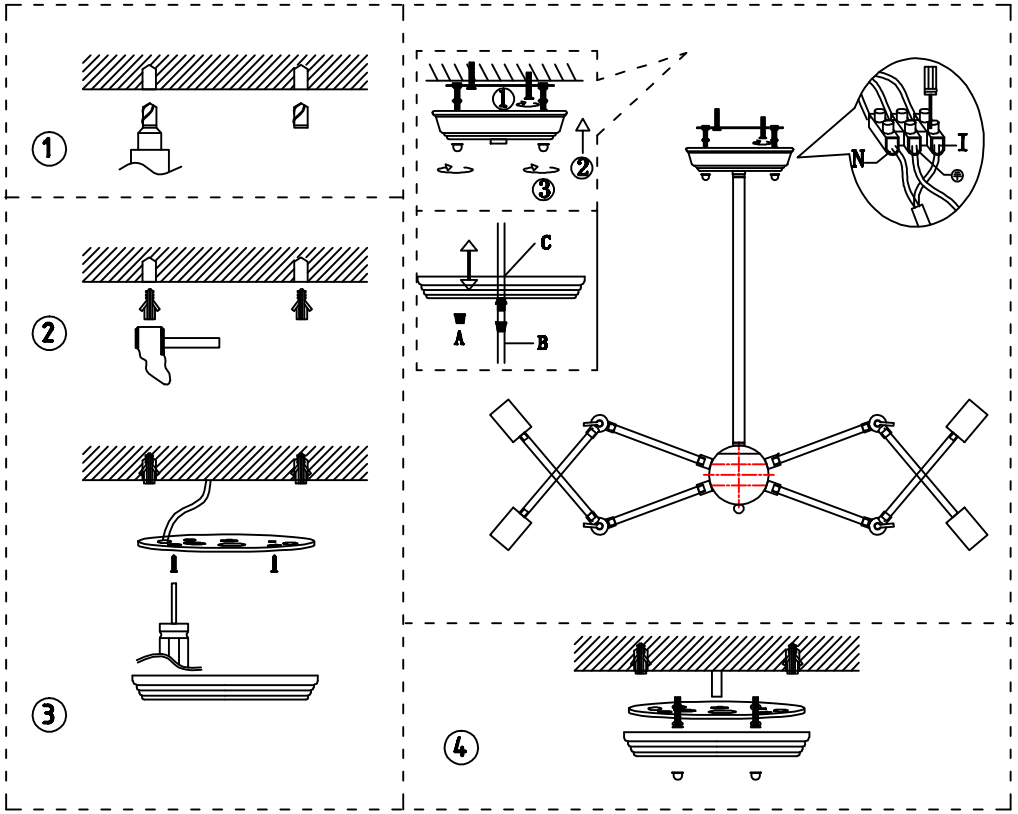

Maintenance

1.Voltage/Frequency:110-130v 50-60Hz.
MAX 12*40W E27.
2.Please wear gloves to install.
3.Don't install it on the moist ceiling.
4.Turn off the power before cleanout.
5.Please wash with the sanitizer without corrosivity.
6.Please install according to the installation manual.

Precautions

Keep the lighting away from acidic chemical solvent,Or the galvanized surface of the lighting will be damaged.

Installation Manual

Please see the installing sketch map and install the parts in the right order.