modway

# Assembly Instructions

EEI-1061

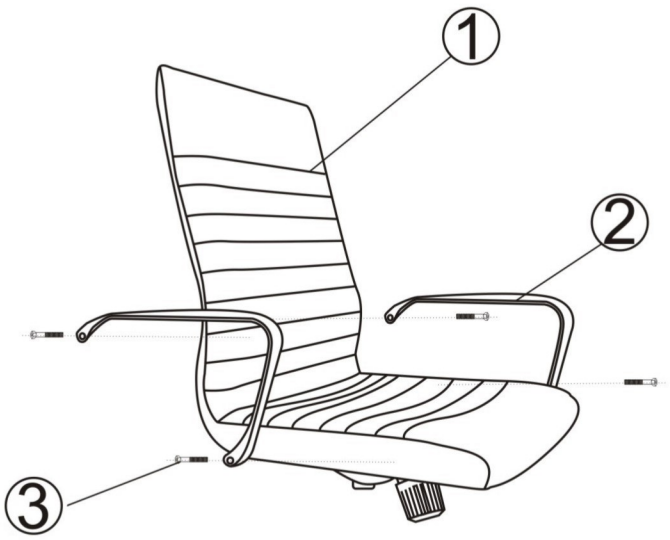


**Warning:** Pls use tool to screw ③ into the holes on the one side of arm and seat, pls pay attention that don't screw tightly first. Then screw in another side of arm and seat. When all two sides are fixed, pls screw in tightly.

A

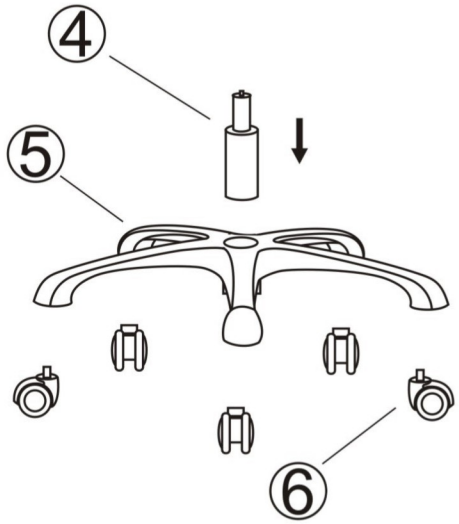


B

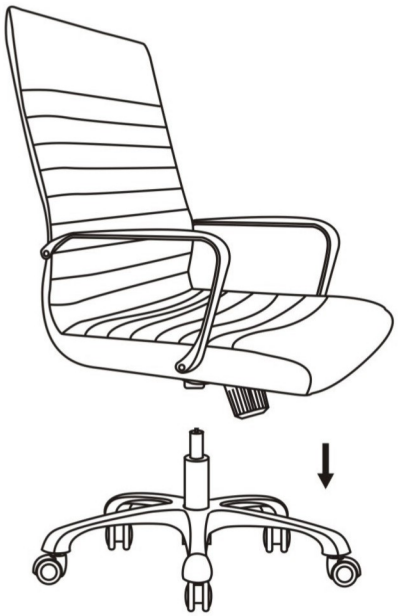

C

D

| No. | Accessories | Size | QTY |
|---|---|---|---|
| ① | | | 1 |
| ② | | | 2 |
| ③ |  | 8*40 | 4 |
| ④ | | | 1 |
| ⑤ | | | 1 |
| ⑥ | | | 5 |
| Tool: | | M8 | 1 |
| | | | |
| | | | |
| | | | |
| | | | |
| | | | |